Name:_____

Exam Question Booklets
OCR & AQA Physics A

Booklet 12
13 Questions
86 marks

Things to remember:

✓

✓

✓

✓

✓

✓

✓

1

(a) State Kirchhoff's first law.

.....

.....

..... [2]

(b) Fig. 3.1 shows part of an electrical circuit.

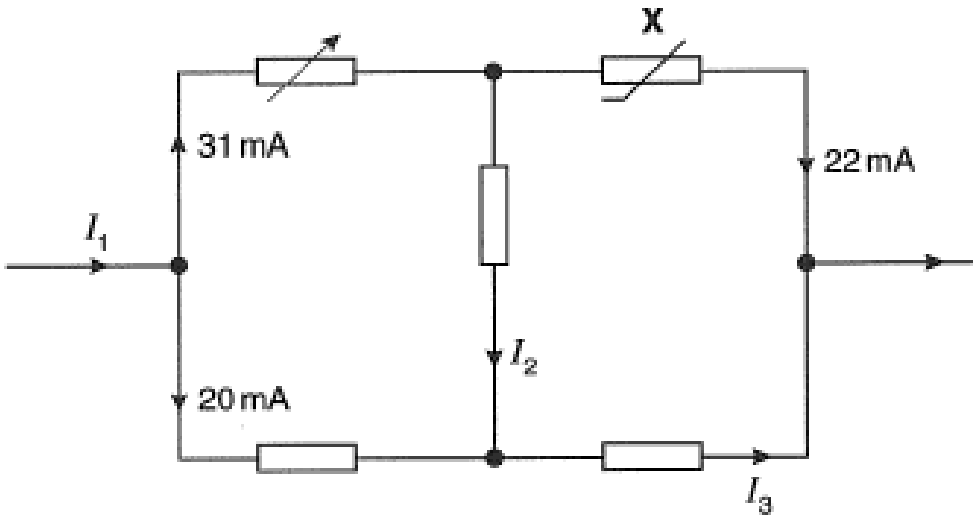

Fig. 3.1

(i) Name the component marked **X**.

..... [1]

(ii) Determine the magnitude of the currents I_1, I_2 and I_3.

I_1 = ... mA

I_2 = ... mA

I_3 = ... mA

[3]

(a) State an example of

(i) a transverse wave

.....[1]

(ii) a longitudinal wave.

.....[1]

(b) By referring to the nature of the vibrations involved, describe what is meant by

(i) a *transverse wave*

.....

.....[1]

(ii) a *longitudinal wave.*

.....

.....[1]

(c) Write **yes** or **no** in the spaces of the table below to indicate the wave phenomena associated with transverse and/or longitudinal waves. The first row in the table has already been completed.

wave phenomenon	transverse waves	longitudinal waves
reflection	YES	YES
refraction		
diffraction		
polarisation		

[3]

(a) Describe a *plane polarised wave*.

.....

.....

.....

..... **[2]**

(b) Light reflected from the surface of water is partially plane polarised in the horizontal direction. The reflected light is totally plane polarised when the angle of reflection is about 53°.

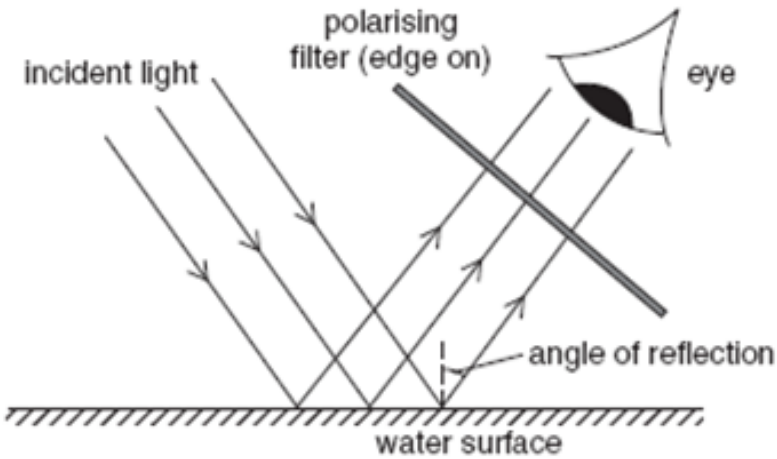

Fig. 7.1

Describe, referring to Fig. 7.1, the experiment that you would perform using a polarising filter (a sheet of Polaroid) to determine whether this statement is correct. Describe what you expect to observe.

In your answer you should make clear how you would use any apparatus to make observations or take suitable measurements.

.....

.....

.....

.....

.....

..... **[4]**

(c) State Malus' law for the intensity I of a beam of plane polarised light transmitted through a polarising sheet with its transmission axis at an angle θ to the plane of polarisation. Explain the meaning of any other symbols that you use.
Use Malus' law to explain the observations in the experiment of part **(b)**.

.....

.....

.....

.....

.....

.....

.....

.....

..... **[4]**

A small radio receiver uses a battery that is capable of delivering a constant current of 40 mA for a period of 5.0 hours.

(a) Calculate the total charge delivered by the battery.

charge = ... unit ..... [3]

(b) Fig. 2.1 shows the graph of current against time for a different battery.

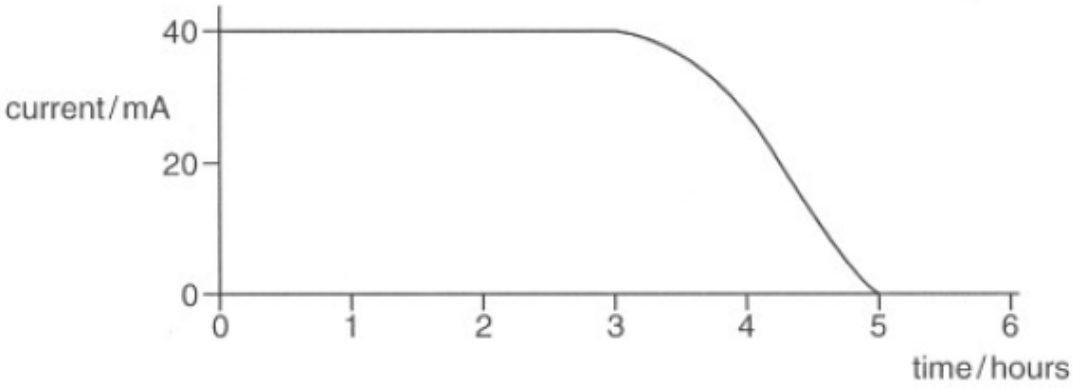

Fig. 2.1

Explain whether the charge delivered by this battery is the same as, greater than or less than your answer to **(a)**.

.....

.....[1]

5

(a) **(i)** State the unit of electric charge.

..... [1]

(ii) Name an instrument that may be used to measure the potential difference (p.d.) across an electrical component.

..... [1]

(b) A 36 W lamp draws a constant current of 3.0 A over a period of 600 s from a battery. Calculate

(i) the p.d. across the lamp,

p.d. = ... V [3]

(ii) the energy transferred by the lamp,

energy = ... J [2]

(iii) the charge passing through the lamp,

charge = ... C [3]

(iv) the number of electrons passing through the lamp.

number = ... [2]

6 Fig. 4.1 shows an arrangement to demonstrate the interference of light.
A double-slit, consisting of two very narrow slits very close together, is placed in the path of a laser beam.

Fig. 4.1

(a) Light spreads out as it passes through each slit. State the term used to describe this.

.....[1]

(b) The slits S_1 and S_2 can be regarded as coherent light sources. State what is meant by *coherent*.

.....

.....[1]

(c) Light emerging from S_1 and S_2 produces an interference pattern consisting of bright and dark lines on the screen. Explain **in terms of the path difference** why bright and dark lines are formed on the screen.

.....

.....

.....

.....

.....

.....[4]

(d) The wavelength of the laser light is 6.5×10^{-7} m and the separation between S_1 and S_2 is 0.25 mm. Calculate the distance between neighbouring dark lines on the screen when the screen is placed 1.5 m from the double-slit.

distance = ...m [3]

A narrow beam of monochromatic light of wavelength 590 nm is directed normally at a diffraction grating, as shown in **Figure 8**.

Figure 8

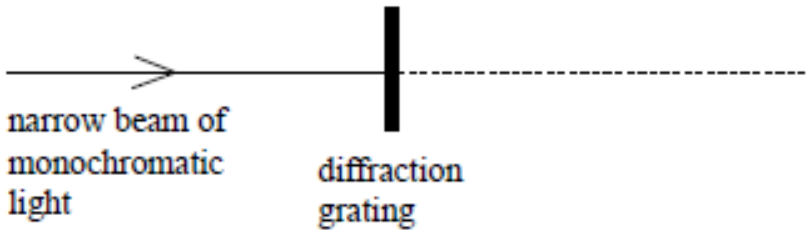

(a) The grating spacing of the diffraction grating is 1.67×10^{-6} m.

(a) (i) Calculate the angle of diffraction of the second order diffracted beam.

answer.....degrees

(4 marks)

(a) (ii) Show that no beams higher than the second order can be observed at this wavelength.

(3 marks)

(b) The light source is replaced by a monochromatic light source of unknown wavelength. A narrow beam of light from this light source is directed normally at the grating. Measurement of the angle of diffraction of the second order beam gives a value of 42.1°.

Calculate the wavelength of this light source.

answer.....m

[2]

8

(a) Calculate the total resistance between the points X and Y for the circuit shown in Fig. 3.1.

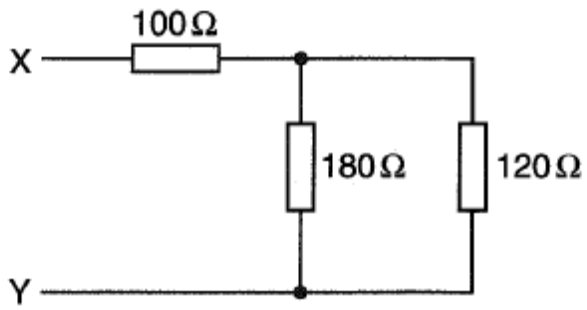

Fig. 3.1

resistance = ... Ω [3]

9

Kirchhoff's second law is based on the conservation of a quantity. State the law and the quantity that is conserved.

.....

.....

..... [2]

Fig. 4.1 shows an electrical circuit.

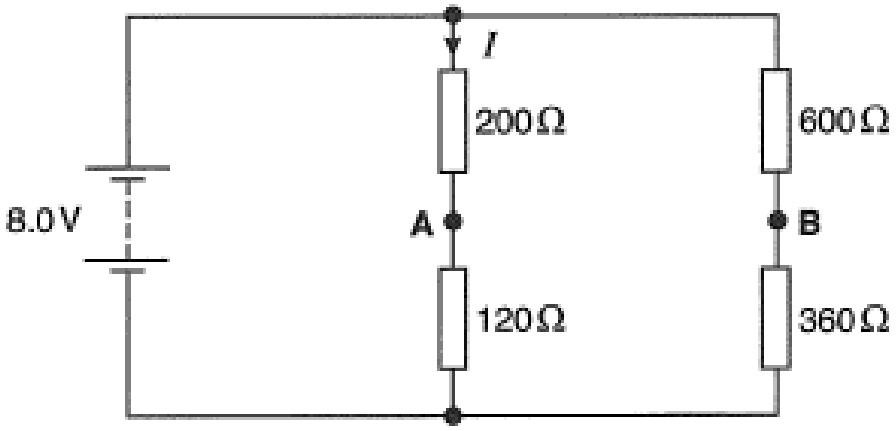

Fig. 4.1

The battery has negligible internal resistance.

(a) Show that the current I is 25 mA.

[2]

(b) Calculate the potential difference (p.d.) across the resistor of resistance 120 Ω.

p.d. = ... V [1]

(c) Explain why a voltmeter connected between points **A** and **B** will read 0 V.

.....

.....

..... [2]

(a) A student is given three resistors of resistances 10 Ω, 12 Ω and 22 Ω.

(i) Draw a sketch to show how all three resistors can be connected to give **maximum** resistance. Calculate the maximum resistance.

Arrangement:

Calculation for **maximum** resistance:

maximum resistance = ... Ω [2]

(ii) Draw a sketch to show how all three resistors can be connected to give **minimum** resistance. Calculate the minimum resistance.

Arrangement:

Calculation for **minimum** resistance:

minimum resistance = ... Ω [3]

(a) On Fig. 2.1, sketch the variation with temperature of the resistance of a pure metallic conductor.

Fig. 2.1 [2]

(b) Fig. 2.2 shows a circuit used to monitor the changes in the temperature of a room.

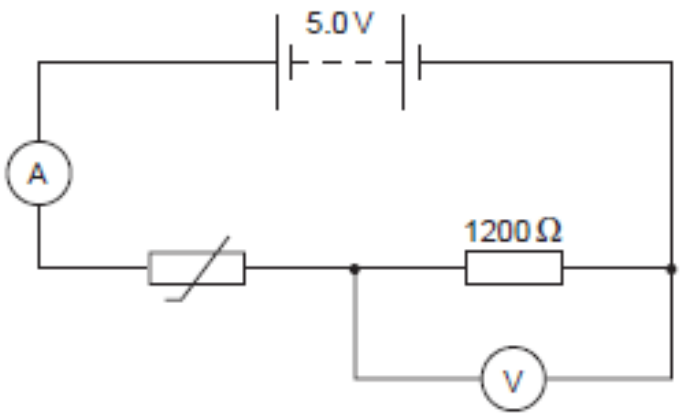

Fig. 2.2

The thermistor is connected in series with a resistor of fixed value 1200 Ω. The battery has e.m.f. 5.0 V and negligible internal resistance. Assume that the ammeter has negligible resistance and the voltmeter has very high resistance.

(i) The thermistor is a negative temperature coefficient (NTC) thermistor. State and explain the changes in the ammeter and voltmeter readings as the temperature of the thermistor is increased.

.....

.....

.....

.....

.....

.....

.....

..... [4]

(ii) At a particular temperature, the reading on the voltmeter is 3.6 V. Calculate the resistance of the thermistor at this temperature.

resistance = ... Ω [3]

(a) **(i)** Place a tick (✓) in the box for an alternative unit for the volt.

JC ☐

Js^{-1} ☐

JC^{-1} ☐ [1]

(ii) The statement below is that for Kirchhoff's second law.

The algebraic sum of the e.m.f.s around a loop in a circuit is equal to the algebraic sum of the p.d.s around the loop.

Fig. 5.1 shows an electrical circuit.

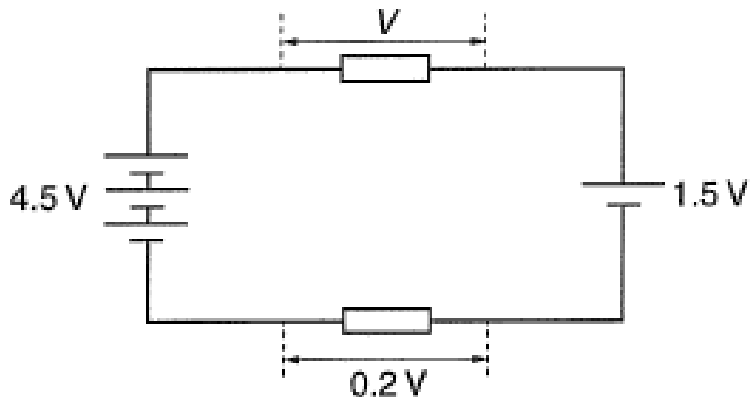

Fig. 5.1

Use this law to determine the p.d. *V*.

V = ... V [2]

(b) Fig. 5.2 shows a potential divider circuit.

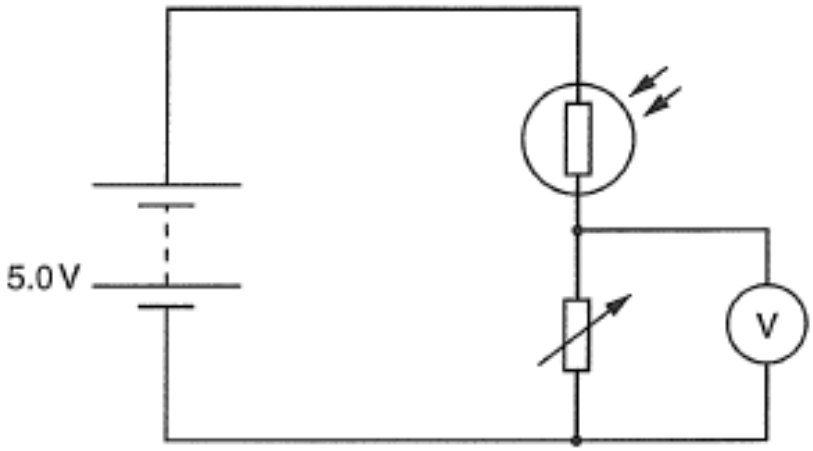

Fig. 5.2

The voltmeter has a very large resistance and the battery may be assumed to have negligible internal resistance.

For a particular intensity of light, the resistance of the LDR is 2.4 kΩ. The variable resistor is set on its maximum resistance of 4.7 kΩ.

(i) Calculate the reading on the voltmeter.

voltmeter reading = ... V [3]

(ii) State how the answer to **(b)(i)** changes when the light intensity is decreased.

.....

.....

..... [1]